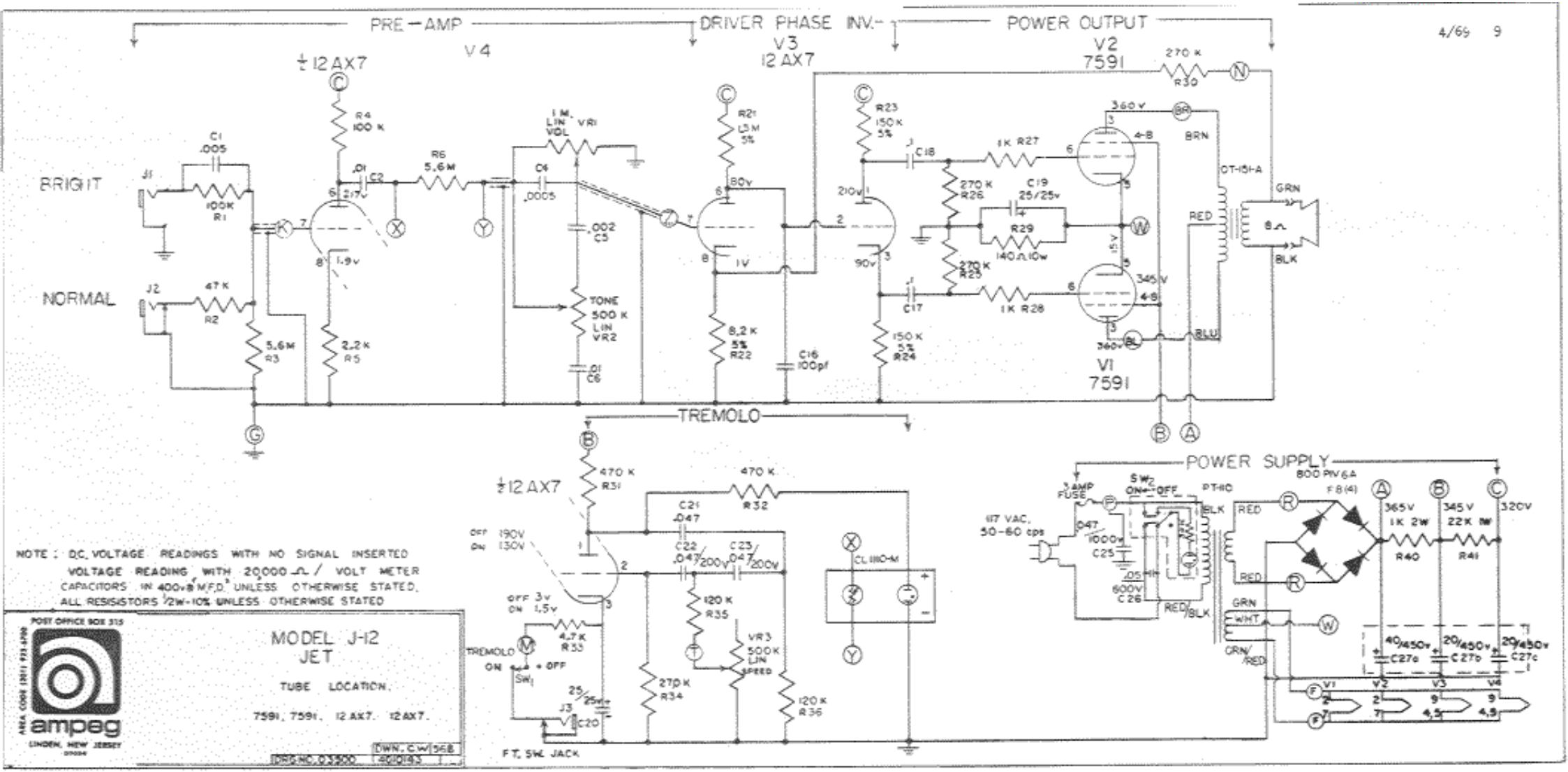

NOTE: DC. VOLTAGE READINGS WITH NO SIGNAL INSERTED
VOLTAGE READING WITH 20,000 Ω / VOLT METER
CAPACITORS IN 400v 'M.F.D.' UNLESS OTHERWISE STATED.
ALL RESISISTORS ½W-10% UNLESS OTHERWISE STATED

POST OFFICE BOX 313
AREA CODE (201) 925-4900
ampeg
LINDEN, NEW JERSEY

MODEL J-12
JET

TUBE LOCATION.

7591, 7591, 12AX7, 12AX7.

DWN. C.W. 5-68
DRG. NO. 03900 1-400143